Assembly Instructions

Envistar Compact

Size 04-16

Translation of the original instructions

Documentation for your unit:

1. Scan the QR code or type docs.ivprodukt.com in your browser.
2. Enter your order number.
3. Press ENTER or click on search.
4. Select your order.

Is any documentation missing?

See information in section

"2.1 Documentation and support", page 9.

TABLE OF CONTENTS

1 SAFETY 5
1.1 Intended use 5
1.2 Unintended uses 5
1.3 General safety 5
1.4 Structure of warning notices 6
1.5 General warning notices 6
1.6 Signs on the unit 7
1.6.1 Type plate 7
1.7 Product liability 8
1.8 Lifting the unit, unit parts 8
1.9 After the product's service life 8

2 GENERAL INFORMATION 9
2.1 Documentation and support 9
2.2 Information messages, not safety-related 9
2.3 Spare parts 9
2.4 Terms, abbreviations and symbols 9

3 DESCRIPTION OF THE UNIT 10
3.1 Configuration of the unit 10
3.2 Orientation of the unit's sides/parts 10

4 DELIVERY RECEPTION / WAREHOUSING 11
4.1 Receive, unpack 11
4.2 Packaging and protection 11
4.3 Recommended storage 11

5 LIFTING THE UNIT 12
5.1 Lifting with forklift 12
5.2 Lift with lifting brackets 13
5.2.1 Lift with lifting brackets, pre-mounted lifting lugs, spreader bar 13
5.2.2 Lift with lifting bracket EMMT-08 13
5.3 Lifting of unit pre-mounted on base frame 14

6 PREPARE ASSEMBLY 15
6.1 Create service area, electrical safe distance 15
6.2 Prepare for outdoor version 16

7 ASSEMBLY 17
7.1 Tools required for assembly 17
7.2 Assemble adjuster foot (accessory), adjust the height 17
7.3 Rotor wheel 18
7.4 Quick connectors 18

7.5 Disassemble/Reassemble/Refit Fan ... 19
7.5.1 Size 04-16 ... 19
7.5.2 Size 04 with fan impeller 020 ... 20
7.5.3 Connect hoses for air flow control ... 21
7.6 Assemble cooling unit ... 21
7.6.1 Circular connection sleeve (size 04) ... 22
7.6.2 Rectangular connection sleeve (size 06-16) ... 22

8 ASSEMBLE CONTROL EQUIPMENT ... 23
8.1 Connect quick connectors between parts ... 23
8.2 Connect hoses for pressure control ... 23
8.3 Connect the supply air temperature sensor ... 24

9 CONNECT DRAINAGE, WATER TRAP ... 25
9.1 Connect water trap MIET-CL-04 (accessories) ... 25
9.2 Connect water trap (site built) ... 25
9.3 Connect water trap on cooling unit ... 26

10 DUCT ACCESSORIES ... 27
10.1 Sealing strips for duct connection ... 28
10.2 Sleeve for dampening vibrations (accessory) ... 28
10.3 Shut-off damper (ECET-UM), trim damper (ECET-TR) ... 28
10.4 Air heater/air cooler in duct ... 28
10.4.1 Air heater water (ECET-VV) ... 29
10.5 Air cooler water (ECET-VK) in duct ... 30
10.5.1 Valve actuator ... 31
10.5.2 Pump, Pipework package ... 31
10.6 Air heater electric (ECET-EV) in duct ... 32

11 AFTER ASSEMBLY ... 33
11.1 Check ... 33

1 SAFETY

This section addresses important safety aspects of assembly, with the aim of raising safety awareness and avoiding personal injuries and damage to surroundings and units.

- This manual contains important instructions. Read it carefully and follow the instructions.
- Pay special attention to warning and information messages, as well as markings on the product.
- Keep the manual for future use.

00177

1.1 Intended use

Intended use

The product is intended to be used air handling unit as comfort ventilation in properties.

Intended users

The contents of this manual are intended for personnel assembling the unit on site.

Intended user environment

- The unit is usually placed indoors, but is also available as an outdoor version.
- When assembled indoors, the unit must be assembled in a ventilated area that maintains a temperature between +7 and +30 °C, and that maintains a moisture content of <3.5 g/kg in dry air in the winter.
- The unit can also be equipped for assembly in cold attics.

1.2 Unintended uses

Any use other than specified in Intended use is prohibited unless specifically permitted by IV Produkt. It is not permitted to use the unit in potentially explosive environments.

1.3 General safety

Failure to comply with the safety precautions may result in injury to persons or damage to air handling units. To avoid personal injuries and damage to surroundings or units:

- Follow national and local laws/regulations for safe work, e.g. fall protection when working at a height.
- Do not wear loose clothing or jewellery that may become fastened.
- Do not step or climb on the unit.
- Use appropriate tools.
- Use appropriate personal protective equipment.
- Note the unit's markings: product signs, information and warning stickers.

Personal Protective Equipment (PPE)

Personal protective equipment must always be used based on the risks present in the workplace. For example, wear protective shoes with steel toecaps, hearing protection, protective helmet, gloves, safety glasses or goggles, fully-covering clothing, safety overalls, face mask/respiratory protection and/or fall protection as necessitated by the task and work environment.

1.4 Structure of warning notices

Warning notices in the instruction warn of risks when handling and assembling the product. Carefully follow the instructions published in warning notices.

The warning symbol indicates that a risk exists.

WARNING! indicates a potential risk that, if not avoided, can cause **life-threatening or serious** situations that can lead to death or personal injury.
CAUTION! indicates a potential risk that, if not avoided, can cause **material damage** too the product or surroundings as well as impairment of product function.

"Risk of xxxxxx." Indicates the risk in a short risk title.

A description in italics provides more detailed information about what the risk entails.

- The bullet points indicate how the user avoids harm.

1.5 General warning notices

WARNING!
Risk of life-threatening or serious personal injury.
Electrical voltage can cause electric shock, burns and death. The product must not be energised during assembly.

- Electrical connection and electrical work may only be carried out by a qualified electrician.
- For initial start-up of the unit, see Operation and Maintenance of the unit on IV Produkt's Order portal.

00176

WARNING!
Risk of life-threatening or serious crushing or compression injury.
High unit parts, as well as unit parts with a high or offset centre of gravity, mean a greater risk of tipping.

- Follow the lifting and assembly instructions in this manual.
- Use lifting equipment where available.
- Use appropriate protective equipment.
- Exercise caution when working between unit parts.

00178

WARNING!
Risk of life-threatening or serious crushing or compression injury.
The unit parts are often heavy and cannot be lifted by hand. See weights indicated on the layout drawing.

- Follow the lifting and assembly instructions in this manual.
- Use lifting equipment where available.
- Use appropriate protective equipment.

00179

WARNING!
Risk of serious crushing injury.
A falling unit when lifting can cause crushing injuries.

- Follow the instructions for lifting in this manual.
- Never exceed the specified weight for the respective lifting method or lifting equipment.
- Slide stops must be fitted when lifting, if bracket is used.
- Replace used T-bolts and nuts with new ones after each lift (EMMT-12).

00180

WARNING!
Risk of cutting.
Sharp edges can cause cuts.

- Use appropriate personal protective equipment when the work requires it.

00181

1.6 Signs on the unit

Keep signs and stickers free of dirt. Replace missing, damaged or unreadable signs and stickers on the machine. Contact IV Product for replacement stickers by specifying the article number.

1.6.1 Type plate

The unit and any associated cooling unit/reversible heat pump have a type plate affixed to the front. The type plate is used, among other things, for identification of the product.

00043

Figure: Example of a unit type plate

1. Order number
2. Product name/model
3. Product code
4. Unit designation
5. Date of manufacture
6. QR code
7. CE mark
8. Manufacturer

1.7 Product liability

The unit complies with industry requirements for quiet air handling units with high-efficiency recovery systems for heating and cooling.

CE marking

The air handling unit is CE marked and meets the applicable requirements according to specified directives and standards in the Declaration of Conformity. The marking covers the unit in the configuration in which it was delivered and provided that it has been assembled and commissioned in accordance with IV Produkt's instructions. The declaration does not cover units that have been modified, retrofitted components, or other systems in which the unit may be included. The unit may not be put into service until the system in which it is included complies with the requirements for CE marking.

The Declaration of Conformity can be obtained on IV Produkt's order portal, *"Documentation for your unit:", page 2*.

Manufacturer

The air handling unit is manufactured by IV Produkt AB, Sjöuddevägen 7, S-350 43 VÄXJÖ, Sweden

Warranty

For proper function and for the warranty to be valid, the assembly instructions must be followed.

Extended warranty

Extended warranty is a supplement to the order and to claim extended warranty (5 years), according to ABM 07 with Appendix ABM-V 07 or according to NL 17 with Appendix VU 20, a complete documented and signed IV Produkt Service and Warranty book must be presented.

Disclaimer

Continuous product development may give rise to specification changes without notice.

1.8 Lifting the unit, unit parts

Lifting must be done according to the lifting instructions in this document, *"5 LIFTING THE UNIT", page 12* and according to markings and signs on the unit. If there are no lifting instructions or markings, lifting must be carried out according to lifting methods prepared by the transport industry.

1.9 After the product's service life

To disassemble and decommission the unit, refer to Operation and Maintenance.

2 GENERAL INFORMATION

2.1 Documentation and support

The documentation for your unit can be found in IV Produkt's order portal. See "2.1 Documentation and support", page 9.

It can take up to two weeks for all documentation to be available in the IV Produkt's order portal. The text "Documentation in progress" appears until the documentation is complete. In case of missing or incorrect documentation, contact DU/Documentation. For other support, please contact the relevant department. Contact details are listed on the reverse side of the manual.

2.2 Information messages, not safety-related

Symbol together with information text highlights difficulties and also gives tips and recommendations.

00182

2.3 Spare parts

Spare parts list can be found atIV Produkt's order portal. Order spare parts and accessories from IV Produkt. See contact details on the last page of the manual. When contacting a department, state the order number and unit designation as shown on the type plate located on the unit.

2.4 Terms, abbreviations and symbols

Term	Explanation
Thermal wheel	Rotary heat exchanger
Unit part	Part of the unit/functional section (for example fan, media, etc).

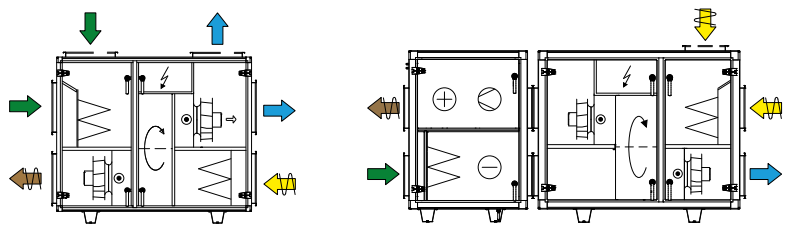

00278

Figure: Example of a layout drawing

Outdoor air	Extract air	Supply air
Exhaust air	Fan	Filter
Shut-off damper	Trim damper	Cooling coil water
Heating coil water	Heating coil electric	Noise attenuator
Thermal wheel	Compressor	Cooling unit
Quick connector	Media section	

3 DESCRIPTION OF THE UNIT

3.1 Configuration of the unit

The unit can be supplied with or without control and adjustment equipment. See "8 ASSEMBLE CONTROL EQUIPMENT", page 23.

The unit is supplied as a complete unit, with or without a cooling unit. All can be supplied in right or left versions and with supply air connection in the upper or lower level. The units are on legs (top-hat profiles) that can be equipped with multi-height adjuster feet (accessories). The unit's framework consists of aluminium profiles, 50 x 50 mm.

Examples of variants

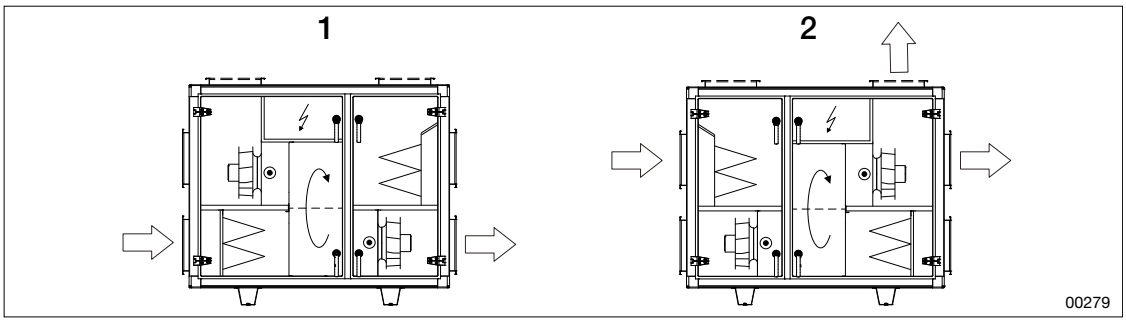

Figure: Envistar Compact standard, right version

1. Standard variant with supply air at the bottom
2. Standard variant with supply air at the top

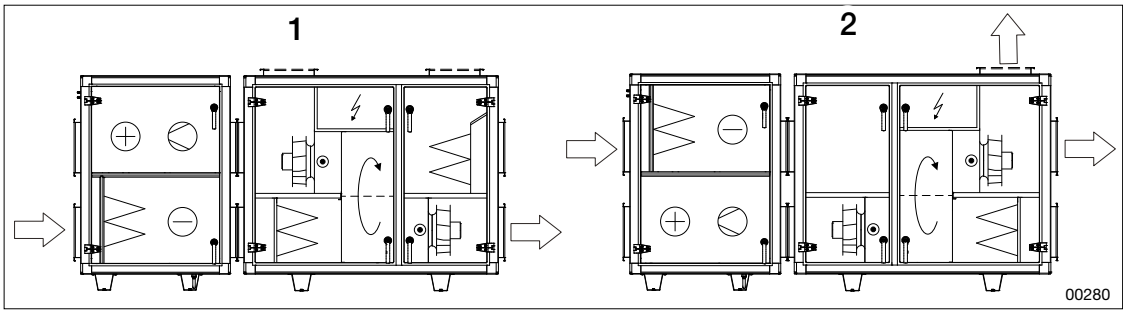

Figure: Envistar Compact with cooling unit, right version

1. Variant with cooling unit, with supply air at the bottom
2. With cooling unit, supply air at the top

3.2 Orientation of the unit's sides/parts

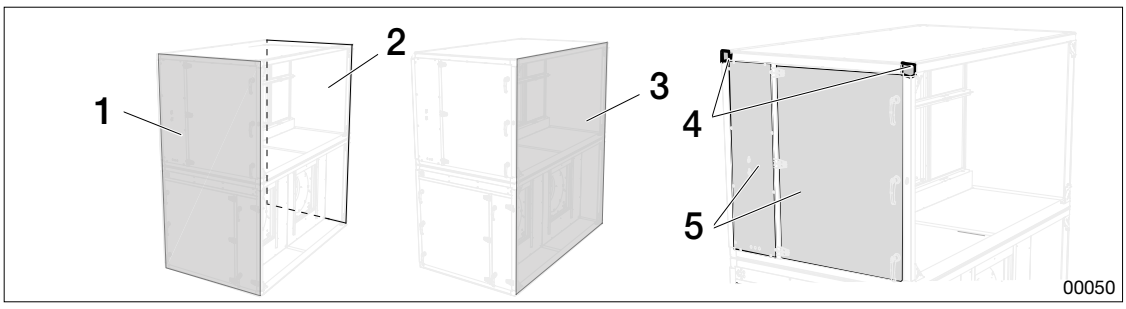

Figure: Parts of the unit

1. Access side
2. Back
3. Gable side
4. Corner fitting
5. Covers

4 DELIVERY RECEPTION / WAREHOUSING

4.1 Receive, unpack

Upon arrival, check the goods and their packaging. Make sure there is no damage.

4.2 Packaging and protection

The product's packaging is designed to protect the product from moisture and dirt during transport and storage.

The product should be stored in its original packaging for as long as appropriate. See *"4.3 Recommended storage", page 11*. If the packaging is removed, the product must be protected so that particles (e.g. dust and dirt) or water do not penetrate the functional sections.

If the goods are dirty on arrival, rinse the unit with water and, if necessary, clean according to the instructions for the unit's surfaces in *"11 AFTER ASSEMBLY", page 33*.

4.3 Recommended storage

Before assembly, the product must be stored on a flat surface, preferably in a dry and warm area.

If stored outdoors, the product must be protected from weather conditions such as rain, snow and direct sunlight. Ventilation inside the assembly parts must be ensured during storage. The product can be stored in both warm and cold conditions, temperature range -40 °C till +50 °C.

Small amounts of condensation water, which occurs during storage in fluctuating temperatures, will dry up when the unit is put in operation, ensure that:

- there is good air circulation between the packaging and unit as well as inside functional sections. the packaging is opened to let air in if necessary.
- the product is protected against extreme temperatures and weather conditions.
- the product is protected against water ingress so that large volumes of stagnant water do not accumulate inside the unit.

5 LIFTING THE UNIT

WARNING!
Risk of life-threatening or serious crushing or compression injury.
The unit parts are often heavy and cannot be lifted by hand. See weights indicated on the layout drawing.

- Follow the lifting and assembly instructions in this manual.
- Use lifting equipment where available.
- Use appropriate protective equipment.

00179

WARNING!
Risk of serious crushing injury.
A falling unit when lifting can cause crushing injuries.

- Follow the instructions for lifting in this manual.
- Never exceed the specified weight for the respective lifting method or lifting equipment.
- Slide stops must be fitted when lifting, if bracket is used.
- Replace used T-bolts and nuts with new ones after each lift (EMMT-12).

00180

CAUTION!
Risk of damage to the product
Chains/straps that are lying against the unit when lifting may damage the unit.

- Use spreader bars when lifting with bracket.
- Follow instructions for working with spreader bars.

00186

5.1 Lifting with forklift

The lifting forks (1) must be the same length as the unit packaging (2) or longer.

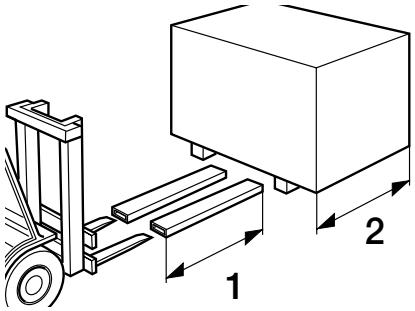

00053

Figure: Lifting with forklift

5.2 Lift with lifting brackets

5.2.1 Lift with lifting brackets, pre-mounted lifting lugs, spreader bar

- The maximum permitted angle at the lift hook is 80º
- The inclination slope of unit parts when lifting is 15º. If the tilt is greater than 15º, the chains/straps must be shortened or extended until the angle is less than 15º.
- The spreader bar must be 100—400 mm wider than the unit.

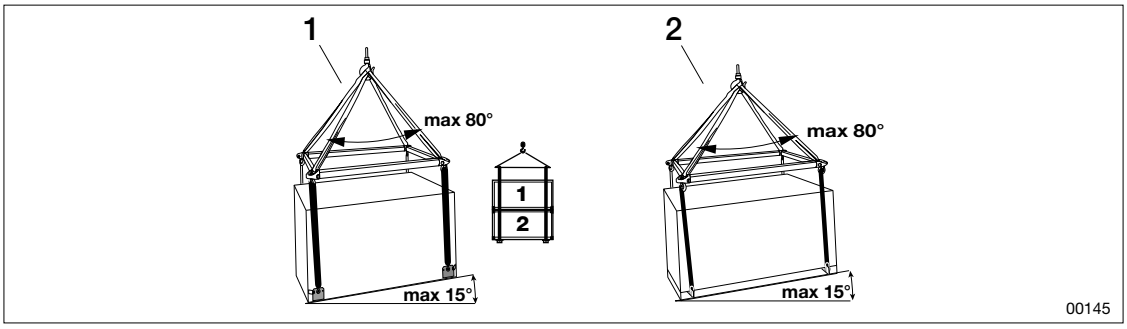

Figure: Illustration of lift with spreader bar and inclination

1. Lift with EMMT-08 with spreader bar
2. Lift in base frame with spreader bar

5.2.2 Lift with lifting bracket EMMT-08

- Load per lifting bracket ≤ 400 kg.
- Load if all four brackets are used ≤ 1600 kg.
- A safety factor of 1.6 has been utilised in static testing of the lifting bracket.
- Use shackle with safety factor 6:1.
- Brackets must not be mounted downwards or sideways.
- Lifting brackets must not be mounted in the middle profile of double stacked parts.

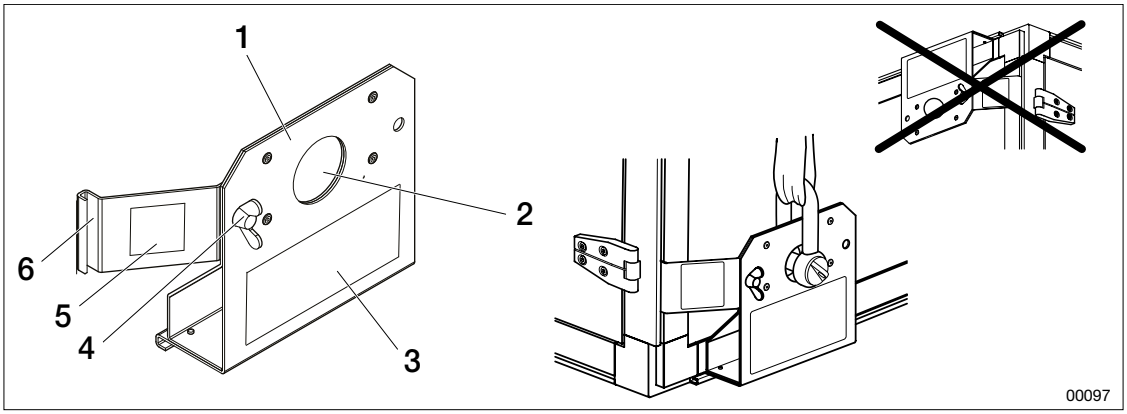

Figure: Lifting bracket EMMT-08

1. Lifting bracket EMMT-08
2. Lifting lug
3. Lifting bracket sticker
4. Wing nut
5. Slide stop sticker
6. Slide stop

EMMT-08 is delivered in a set of four.

1. Place the lifting brackets in the bottom four corners of the unit or unit part (on the longest sides of the part), with the lifting lug upwards.
2. Push the brackets into the horizontal track in the unit's aluminium profile.
3. Push the slide stop into the vertical track in the unit's aluminium profile.
4. Lock by tightening the wing nut.

5.3 Lifting of unit pre-mounted on base frame

WARNING!
Risk of serious crushing injury.
A falling unit when lifting can cause crushing injuries.

- Follow the instructions for lifting in this manual.
- Never exceed the specified weight for the respective lifting method or lifting equipment.
- Never remove or move the factory-fitted lifting lugs.
- Use shackle with safety factor 6:1.
- Lifting straps must not be pulled through the lifting lugs.

00192

Aluminium beam H=100mm:

- Maximum load=750 kg/lifting lug. Total load=3000kg (all four lifting lugs).

1. Fit a shackle in each of the pre-mounted lifting lugs.
2. Pull straps through each shackle.
3. Lift with suitable lifting equipment.

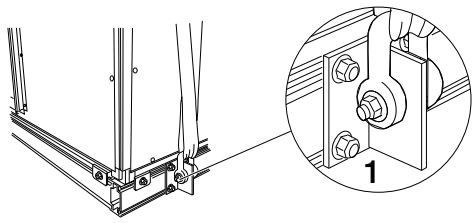

00100

Figure: Lifting loop pre-mounted on base frame

1. Lifting lug with shackle (four)

6 PREPARE ASSEMBLY

When setting up the unit, it must be horizontal at the longitudinal leading edge, as well as slightly inclined forward (towards the inspection side) to create proper drainage of condensation water. See "7.1 Tools required for assembly", page 17.

Inlet grilles and duct systems shall be designed and assembled so that:

- water is prevented from penetrating into the unit.
- recirculation and short-circuiting between the exhaust air and outdoor air is prevented.
- drainage cannot run backwards to the unit.

The duct system must be designed and the control system configured to prevent pressure increase through filter/air ducts, for example by soft-starting fans and opening dampers when fans are in operation. See "10 DUCT ACCESSORIES", page 27.

The water trap must be assembled as specified. See "9 CONNECT DRAINAGE, WATER TRAP", page 25.

6.1 Create service area, electrical safe distance

- The service area in front of the unit should be about 1.5 x the depth of the unit so as to allow for service, replacement of parts and cleaning.
- Follow the National Electrical Safety Board's recommendations regarding the free service space to be located in front of electrical connecting equipment.

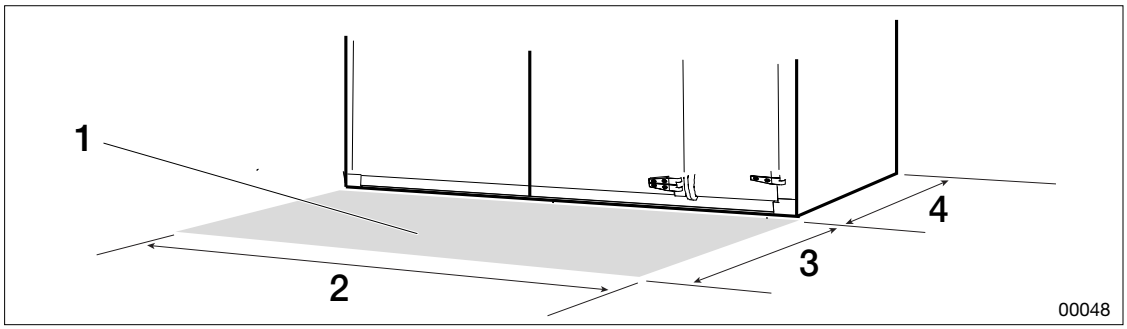

Figure: Service area on the inspection side

1. Service area
2. Service area width (width of the unit)
3. Service area depth (1.5 x depth of the unit)
4. Depth of the unit

6.2 Prepare for outdoor version

The location of outdoor units with respect to wind direction and proximity to surrounding walls may, in adverse cases, imply the recirculation of exhaust air to outdoor air intakes.
In unsafe conditions, ensure sufficient distance between exhaust air and outdoor air intakes.

For outdoor units, the unit is placed on longitudinal beams on top of a waterproof roof. The beam must run throughout the unit. Water intrusion may occur between beams and unit parts.

- Underlying beams (e.g. H or U profile) and anchorage plates are not provided by IV Produkt.

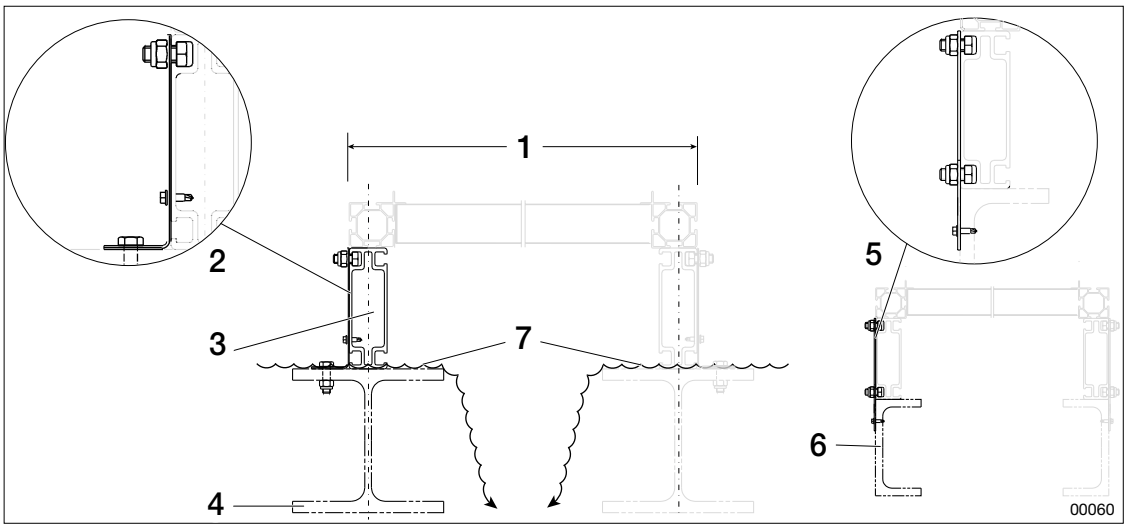

Figure: Aluminium profiles (support) and base frames in cross section as seen from the gable side

1. Unit width
2. Example, anchorage plate on H-profile (not included in delivery)
3. The unit's aluminium base frame
4. H profile (not included in delivery)
5. Example, anchorage plate on U profile (not included in delivery)
6. U profile (not included in delivery)
7. Risk of water ingress

The height of the aluminium base frame is 100 mm and the width is 50 mm.

The air handling unit on the underlying base frame shall be dimensioned as distributed load.

The air handling unit on the aluminium base frame is self-supporting between inspection side and back and only needs support under the longitudinal beam on the inspection side and on the back. The framework must be placed with the extruded profile centrally over the H-beam. See the previous figure.

Anchoring of base frame in underlying beams (underlay) is carried out with anchorage plates according to the example in the previous figure. Anchorage plates are not included in the delivery and must be fitted by the customer.

Externally mounted damper including damper actuator must be weather protected if unit is not supplied with protective intake hood or exhaust hood.

With delivery of a unit in divided outdoor version, see also the order-specific drawing for cover plate assembly, on**IV Produkt's order portal**.

7 ASSEMBLY

Read and follow each step carefully to avoid making errors and causing personal injury or damage to surroundings or unit. See *"1 SAFETY", page 5, "5 LIFTING THE UNIT", page 12, "6 PREPARE ASSEMBLY", page 15*.

For examples of layout drawings and explanations of drawing symbols, see *"2.4 Terms, abbreviations and symbols", page 9*.

WARNING!
Risk of life-threatening or serious personal injury.
Electrical voltage can cause electric shock, burns and death. The product must not be energised during assembly.

- Electrical connection and electrical work may only be carried out by a qualified electrician.
- For initial start-up of the unit, see Operation and Maintenance of the unit on IV Produkt's Order portal.

00176

7.1 Tools required for assembly

A bag of screws, nuts, corner fittings and other items to be used for assembly is supplied with each unit. The following tools are suitable for assembly:

- Power screwdriver with 16-socket, 13-socket, 1/4-inch bit and star bit
- Screwdriver
- Spirit level
- Putty syringe
- Rubber mallet
- Scissors
- Polygrip pliers
- Ring Keys 13, 16,18, 19
- Wooden blocks to lay between support and wall
- Pop riveter
- Lubricating grease in spray bottle
- Pipe cutter

7.2 Assemble adjuster foot (accessory), adjust the height

The unit should tilt slightly forward (towards the inspection side) for condensation runoff and drainage. The tilt may be a maximum of 3 mm/m.

1. Tighten the lower locking nut (3) on the support foot (4).

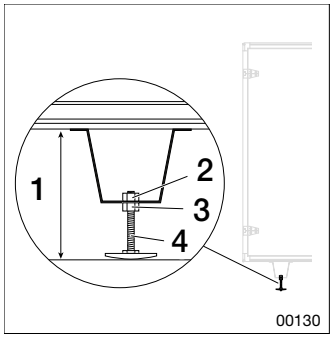

2. Insert the top of the support foot into the hole of the hat profile and tighten the upper locking nut (2). The distance between the floor and the bottom (1) shall be 120 to 160 mm.
3. Use a spirit level and make sure that the unit is level along the inspection side/back.
4. Adjust the height and inclination of the support by turning the upper and lower nuts.
5. Secure all support feet by tightening both the top and bottom nut.

7.3 Rotor wheel

The thermal wheel is pre-adjusted from the factory and does not need to be checked.

7.4 Quick connectors

See "8 ASSEMBLE CONTROL EQUIPMENT", page 23 and order-specific documentation (Control Diagram) on IV Produkt's order portal.

Quick connectors to be joined are marked with the same designation.

Quick connector, signal feed

1. Press together quick connectors according to marking (arrows or other).

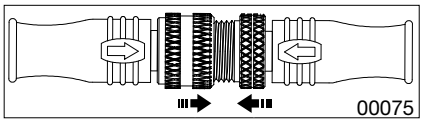

2. Screw together as hard as possible by hand.

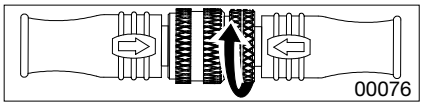

Quick connector, power supply

1. Press together quick connectors according to marking (arrows, dashes or similar).

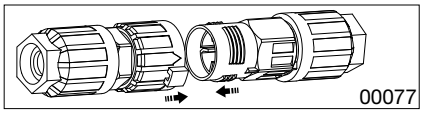

2. Turn the arrow on the white cuff to the mark for closed (padlock).

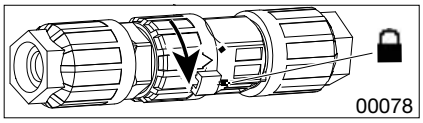

7.5 Disassemble/Reassemble/Refit Fan

7.5.1 Size 04-16

For better access to the inner corner struts when joining adjacent unit parts, the fan can be disassembled.

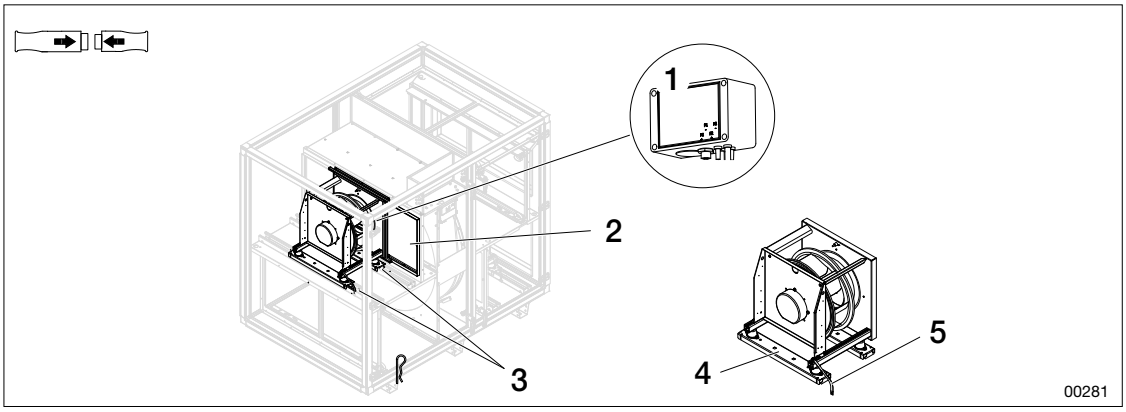

Figure: Remove the fan and reassemble

1. Pressure sensor module
2. Cover plate
3. Pins/screws
4. Top sliding rail
5. Earthing braid

Removing the fan

1. Unscrew the pressure sensor module, but make sure to not loosen hoses or cables attached to the module.
2. Unscrew the cover plate and lift it out (including the screws).
3. Unscrew the earthing braid from the rail on the unit part.
4. Loosen the temperature sensor and remove it through the hole on the fan frame.
5. Unscrew the quick connectors between the fan and the unit part. See *"7.4 Quick connectors", page 18*.
6. Disconnect the pressure sensor hoses between the fan and pressure sensor module.
7. Pull the pins/screws out of the rails (two per fan) and pull the fan out.

Reassemble/Refit fan

- Before inserting the fan, make sure that the pressure sensor module is not in the way. If necessary, disassemble it according to the instructions in *"Removing the fan", page 19.*
- Make sure that each fan is fitted in the correct place (supply air/extract air, and placement order).
- Motors must be connected with flexible cables through cable relief glands.
- The cable length must be adapted so that the fan unit can be pulled out without obstruction.
- Ensure that hoses hang freely (not pinched).
- Ensure that hoses cannot be sucked into the fan.

1. Lift the fan onto the unit's rails and slide it to the far end of the unit part. Make sure the fan is turned correctly so that hoses and cables from the pressure sensor module can be connected.
2. Screw on the cover plate.
3. Screw the earthing braid to the unit's rail. If the fan is refitted, use the supplied self-tapping screw.
4. Insert the pins or self-tapping screw through the holes in the rails.

5. Firmly press the temperature sensor into the hole on the fan frame.
6. Screw the quick connectors together. See "7.4 Quick connectors", page 18.
7. Shorten the pressure sensor hoses to the correct length and connect the hoses between the fan and the pressure sensor module.
8. Gather the cables together and use cable ties to fasten them to the inner wall of the unit. Ensure that they are not pinched when the inspection door closes.
9. Gather the hoses together and use cable ties to fasten them to the cables. Make sure that they are not pressed together or pinched.
10. Screw on the pressure sensor module with the front facing outwards.

7.5.2 Size 04 with fan impeller 020

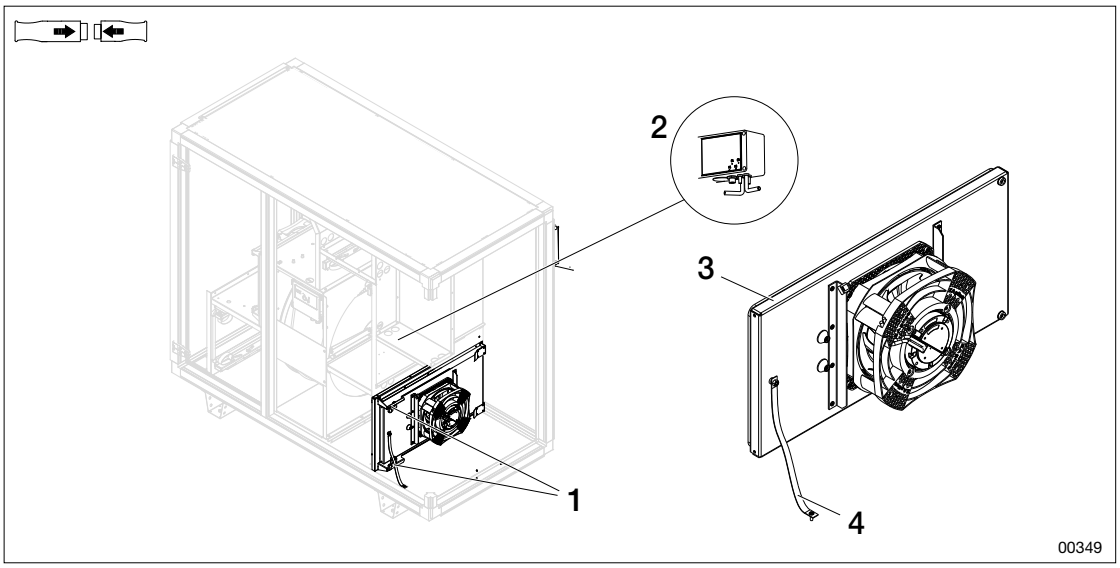

Figure: Remove the fan and refit the fan. Example: 020 in Top 04

1. Snap lock
2. Pressure sensor module
3. Rear plate
4. Earthing braid

To remove

1. Unscrew the earthing braid from the unit.
2. Loosen the temperature sensor and remove it through the hole on the fan frame.
3. Unscrew the quick connectors between the fan and the unit part. See "7.4 Quick connectors", page 18.
4. **Single fan:** Disconnect the pressure sensor hoses between the fan and pressure sensor module.
   Dual fan: Disconnect the pressure sensor hoses in the measuring nipple on the fan.
5. Open the snap locks.
6. Pull out the plate and the fan.

To refit

1. Lift the fan and slide it to the far end of the unit part. Make sure the fan is turned correctly so that hoses and cables from the pressure sensor module can be connected.
2. Close the snap locks.
3. Screw the earthing braid to the unit's rail.
4. Firmly press the temperature sensor into the hole on the fan frame.
5. Screw the quick connectors together.
6. Shorten the pressure sensor hoses to the correct length and connect the hoses between the fan and the pressure sensor module.
7. Gather the cables together and use cable ties to fasten them to the inner wall of the unit. Ensure that they are not pinched when the inspection door closes.
8. Gather the hoses together and use cable ties to fasten them to the cables. Make sure that they are not pressed together or pinched.

7.5.3 Connect hoses for air flow control

- The image shows the location of the hoses for standard assembly. For custom installation, see the unit's dimension drawings.

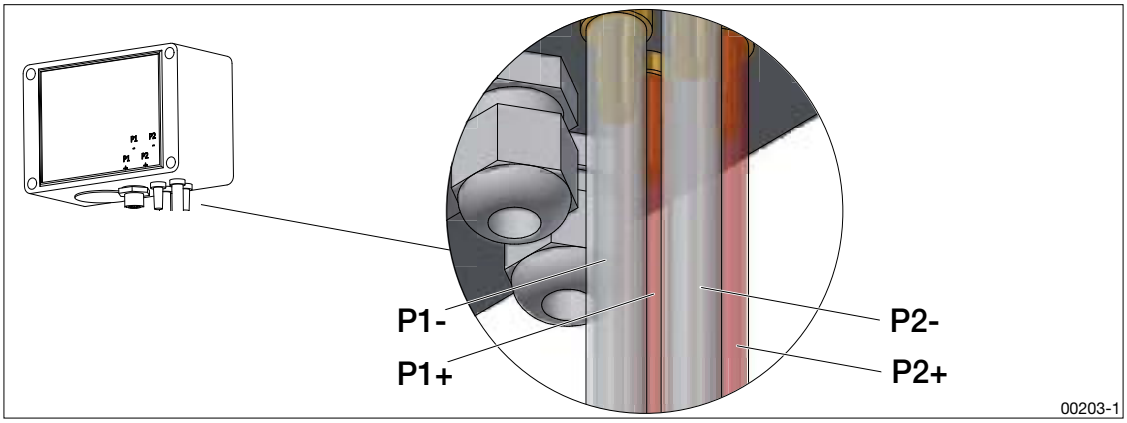

Figure: Hoses for air flow control

P1- Fan cone - Transparent hose
P1+ Fan suction side - Red hose
P2- Filter to fan - Transparent hose
P2+ Filter at intake - Red hose

7.6 Assemble cooling unit

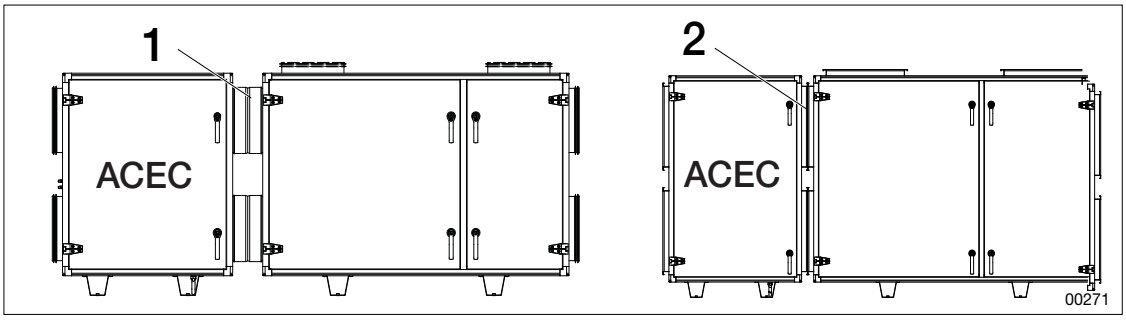

Figure: Cooling unit connection

1. Assembly with spiral connection (size 04)
2. Assembly with guide (size 06-16)

1. Assemble the unit with the cooling unit and assemble according to "7.6.1 Circular connection sleeve (size 04)", page 22 or "7.6.2 Rectangular connection sleeve (size 06-16)", page 22.
2. Connect separate power to the cooling unit main switch and connect quick connector for control signal (cooling mode). For other electrical connections, see the separate Wiring Instructions on IV Produkt's order portal.
3. Connect to ducts. Sealing strips for duct connection are not supplied with the unit.

7.6.1 Circular connection sleeve (size 04)

Circular duct connections are equipped with rubber ring seals. Connect with spiral pipe.

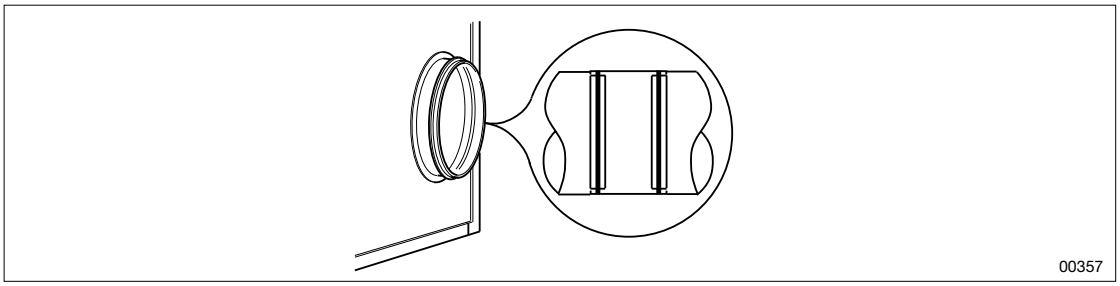

7.6.2 Rectangular connection sleeve (size 06-16)

Rectangular connection sleeves must be supplemented with sealing strips and guide strips. Connect with guide pin or screw joint.

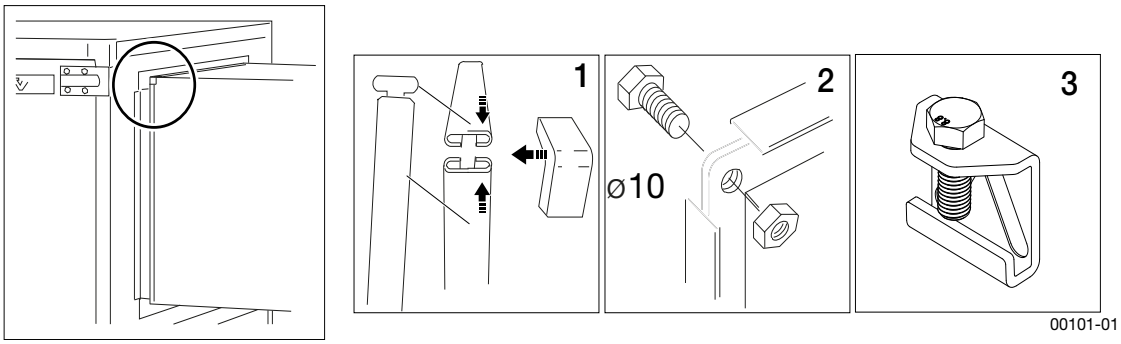

Figure: Rectangular connection sleeve

1. Gasket, guide pin and outer corner.
2. Screw joints (screws in the corners of the frame).
3. Supplementary clamp.

Supplement screw joints with clamp

The screw joints in the corners can be supplemented with clamps to further press the studs together against the duct connection.

1. Place the clamp over the edges and tighten the screw as firmly as possible.

8 ASSEMBLE CONTROL EQUIPMENT

WARNING!
Risk of life-threatening or serious personal injury.
Electrical voltage can cause electric shock, burns and death. The product must not be energised during assembly.

- Electrical connection and electrical work may only be carried out by a qualified electrician.
- For initial start-up of the unit, see Operation and Maintenance of the unit on IV Produkt's Order portal.

00176

If the unit is supplied with control equipment, obtain order-specific drawings from IV Produkt's order portal. Connection of control equipment (power supply, fuse protection other components, fans etc.) not specified in this section is done by a competent technician as instructed in Operation and Maintenance for the unit.

8.1 Connect quick connectors between parts

Interconnect all quick connectors between unit parts. See "7.4 Quick connectors", page 18.

8.2 Connect hoses for pressure control

For correct measurement results, measuring sockets should be placed:

- at least 1 m from duct connection to avoid disruptive turbulence.
- at least 2 m from electric heaters to avoid steel heating.
- a slight distance from duct walls (in outdoor applications) to avoid cold surfaces.

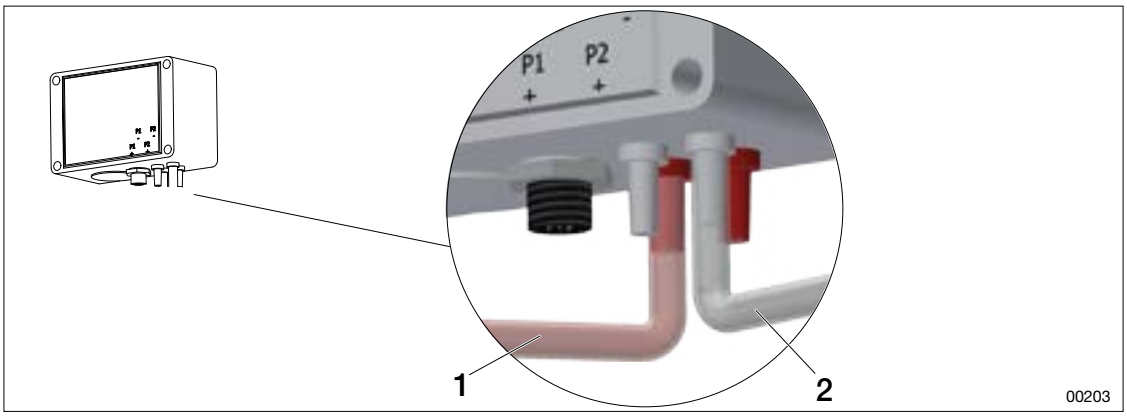

Figure: Hoses for pressure control connected to pressure sensors

1. Connect the red hose from the pressure sensor to the supply air duct (red connector).
2. Connect the transparent hose from the pressure sensor to the extract air duct (white connector).

8.3 Connect the supply air temperature sensor

- The supply air temperature sensor must always be placed after any duct coils (heating/cooling)
- The supply air temperature sensor must not be placed in a sound attenuator.

The sensor is connected to the control cabinet before delivery and hangs twisted under the cabinet.

1. After the unit is fitted together: pull the sensor to an appropriate point in the supply air duct.
2. Drill holes in the duct and screw the holder to the sensor.
3. Connect the sensor in the holder.

9 CONNECT DRAINAGE, WATER TRAP

- All drainages must be connected to separate water traps, which after these can be connected to a common drain.
- Use separate drainage and water traps for negative pressure and positive pressure.

For instructional videos, see IV Produkt's order portal:

Water trap site-built assembly

Water trap prefabricated MIET-CL-04 assembly.

9.1 Connect water trap MIET-CL-04 (accessories)

MIET-CL-04 must not be used with outdoor version, in case of under-pressure. Heating cable pulled through drainage lines and water trap causes the ball not to seal.

Negative pressure (P-) **Overpressure (P+)**

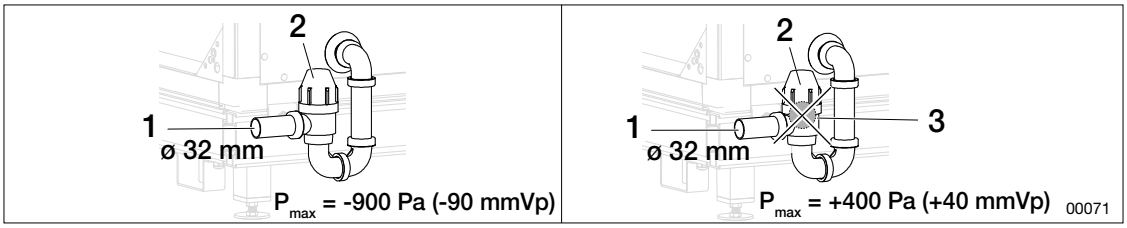

Figure: Water trap (accessory)

1. Outlet (connected to drain)
2. Cup (always mounted upwards)
3. Ball (inside pipe) is removed with overpressure

9.2 Connect water trap (site built)

- Fill the water trap with water before starting the unit.
- For each additional 100 Pa (over 1,000 Pa), H_1 och H_2 must be increased by 10 mm.

Negative pressure (P-) **Overpressure (P+)**

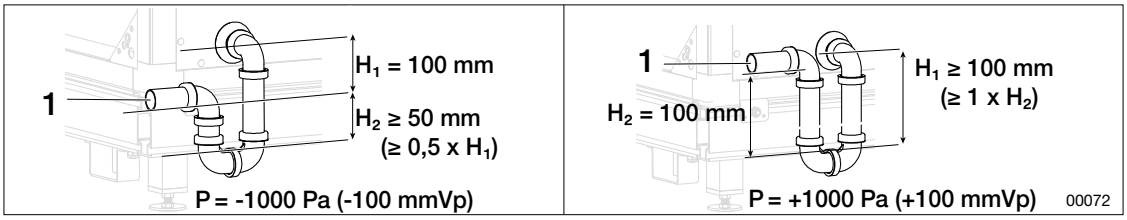

Figure: Water trap (site-built)

1. Outlet (connected to drain)

9.3 Connect water trap on cooling unit

The cooling unit has an integrated water trap. The drainage pipe on the cooling unit is connected to the floor drain pipe with an NC coupling, which is loosely taped inside the support foot (top-hat profile).

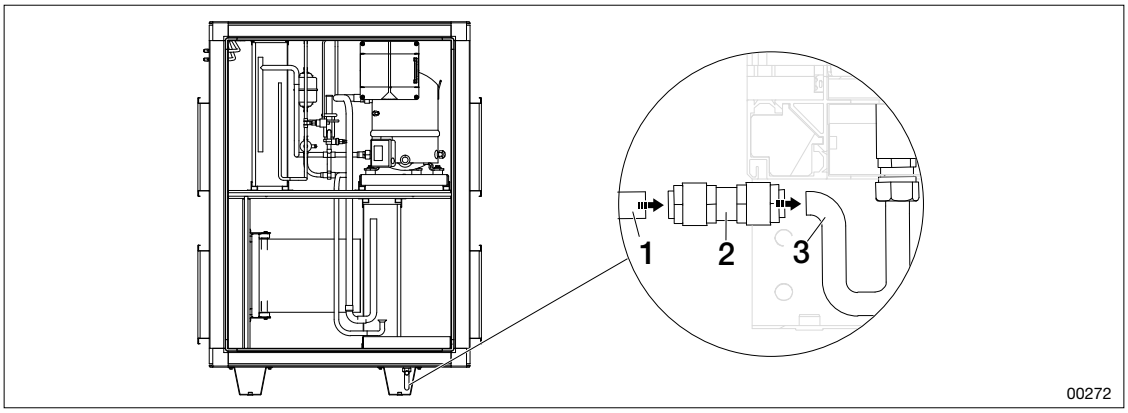

Figure: Drainage pipe and NC coupling

1. Drainage pipe to floor drain (Ø 15 mm)
2. NC coupling
3. Water trap (Ø 15 mm)

1. Remove the loose NC coupling from the hat profile.
2. Push the NC connector over the protruding drainage pipe on the unit until it stops, approximately 30 mm. If it is properly positioned, it should not be possible to rotate or remove by hand.
3. Push the floor drain drainage pipe into the open end of the NC coupling.
4. Lead the drainage pipe away to the floor drain.
5. Feel and make sure that everything is securely connected and that the drainage pipe cannot jump out of the floor drain.

10 DUCT ACCESSORIES

Duct accessories must be placed according to the layout drawing (Technical data), which is available on IV Produkt's order portal. See "2.1 Documentation and support", page 9 and "2.3 Spare parts", page 9.

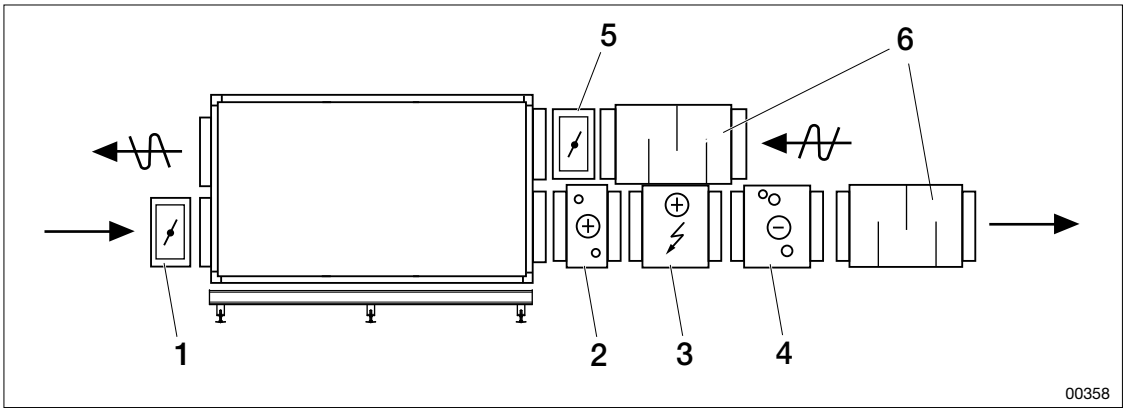

Figure: Placement Duct accessories

1. Shut-off damper (ECET-UM)
2. Air heater water (ECET-VV)
   Air heater water Thermoguard (ECET-TV)
3. Air heater electric (ECET-EV)
4. Air cooler water (ECET-VK)
5. Trim damper (ECET-TR)
6. Sound attenuator (ECET-LD)

Ducts and duct accessories must be supported by support legs or hung if the overhang is longer than 300 mm. Ducts must be connected using PG method (packing, guide pin, and outer corner, or bolt at the corners of the connection frame).

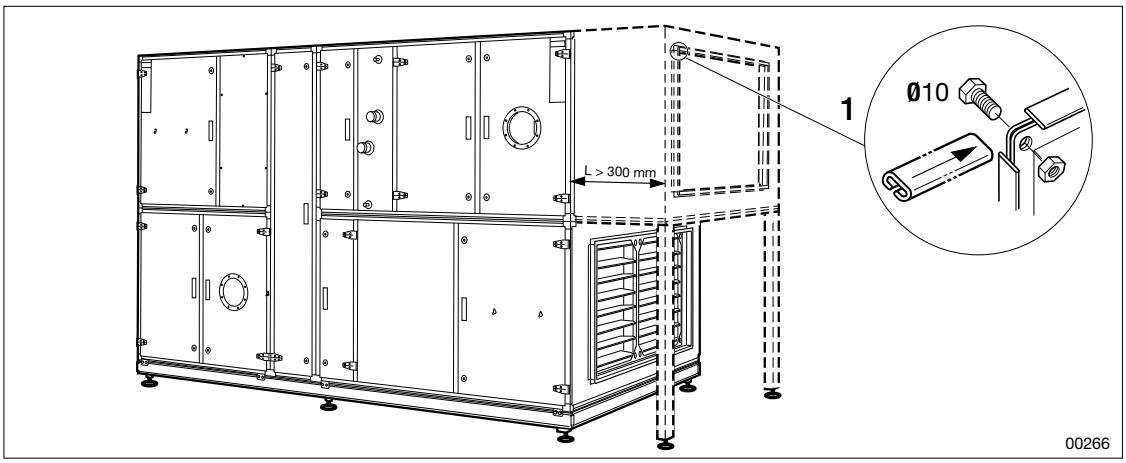

Figure: Support pillars

1. Connection using PG method

10.1 Sealing strips for duct connection

Sealing strips for duct connection are not supplied with the unit. The customer is responsible for ensuring proper sealing against the ductwork.

10.2 Sleeve for dampening vibrations (accessory)

If the duct sleeves are connected for dampening vibrations, the duct insulation must be fitted over the entire connection. Sound attenuator(ECET-LD, ACET-LD)

The sound attenuator is either a rectangular or circular depending on the size of unit and duct connections.

10.3 Shut-off damper (ECET-UM), trim damper (ECET-TR)

The damper can be mounted for horizontal or vertical air streams. If the unit is not supplied with protective intake hood or exhaust hood, the externally mounted damper including damper actuator must be protected from weather.

10.4 Air heater/air cooler in duct

The distance after a duct elbow, damper, or similar must be at least three times the duct dimensions to obtain even air distribution.

- In order not to damage the air heater, always use a counterhold when connecting.
- Ensure that connecting pipes (including insulation) do not block inspection hatches.

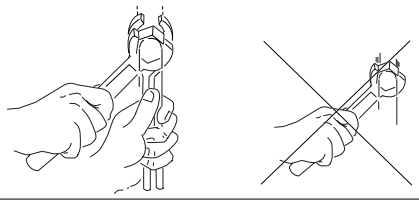

Figure: Pipe connection counterhold

1. Connect air heater/air cooler to pipes.
2. **Air heater:** Connect frost protection. **Air cooler:** Connect drainage.
3. Ensure that there are possibilities for venting and bleeding on the air heater/air cooler venting and bleed nipples.

10.4.1 Air heater water (ECET-VV)

The air heater is reversible to match the air direction (right or left). Ensure that the air heater is turned so that there is a counter-flow direction between air flow and liquid flow.

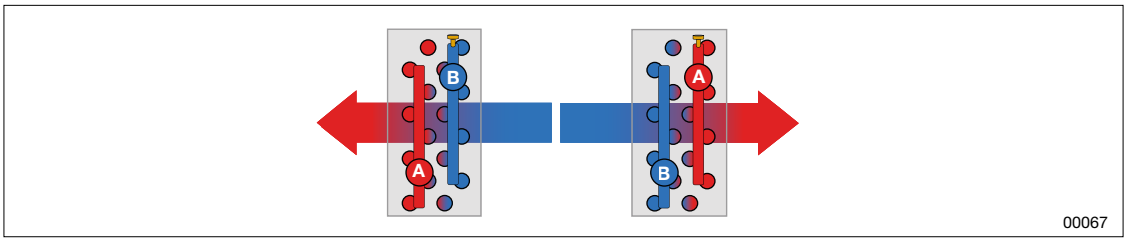

Figure: Connection pipes, heating coil (ECET-VV)

A. Fluid in

B. Fluid out

Thermoguard coils:

- marked with inlet and outlet on the fluid side, as well as air direction.
- delivered, as standard, for vertical assembly (horizontal air stream).
- must always have the possibility of pressure relief via the coil return line out to the expansion vessel, regardless of whether the control valve is open or closed. This applies to all kinds of control valves, shunt couplings and the like.

Antifreeze sensor

The heating coil must be fitted with antifreeze sensors (clamp-on detector or immersion sensor) to prevent ice from forming in the coil rows. Immersion sensor socket/clamp-on detector for antifreeze protection must be on the outgoing liquid side. The frost protection sensor is placed at the coldest point of the coil, i.e. on the outgoing fluid assembly tubes.

Immersion sensor

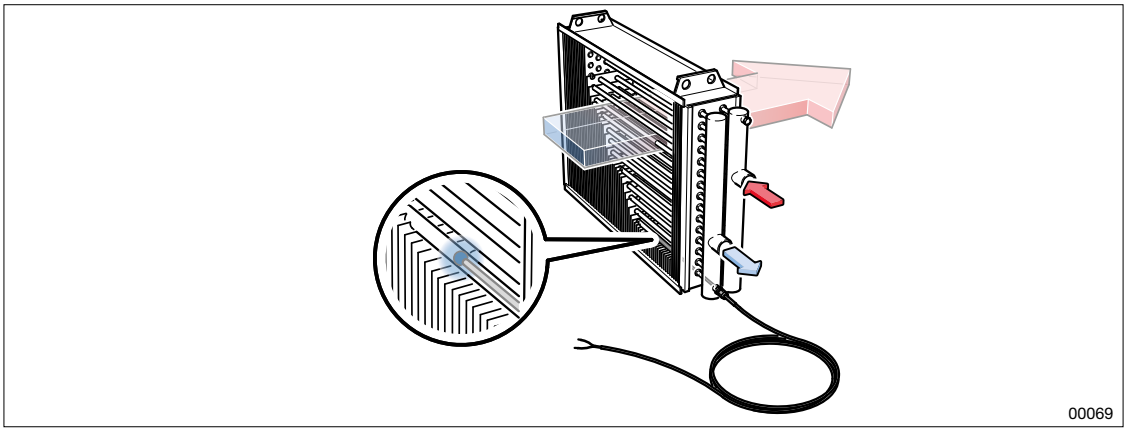

Figure: Coil with header for outgoing fluid with immersion sensor fitted in drainage/bleeding nipple.

Immersion sensor size: diameter 4 mm, insert length maximum 240 mm. The immersion sensor is placed in the venting nipple (T-pipe can be used to allow for venting) or in the drainage/bleeding nipple.

Clamp on detector

Height placement of the outlet fluid side pipe varies depending on how the coil is installed in the duct for air flow direction.

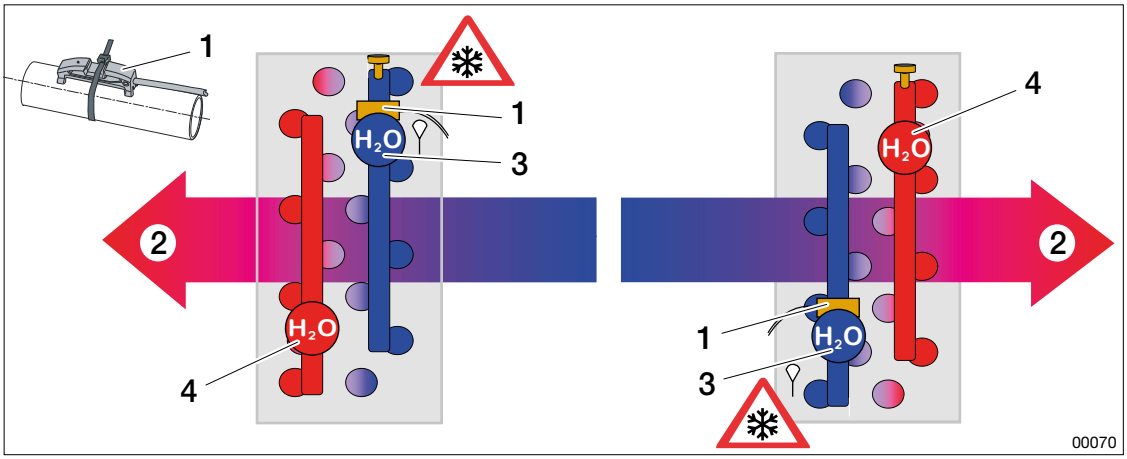

Figure: Clamp on detector

1. Clamp on detector
2. Air direction
3. Outgoing fluid
4. Incoming fluid

10.5 Air cooler water (ECET-VK) in duct

Cooling coil must be connected for horizontal air stream.

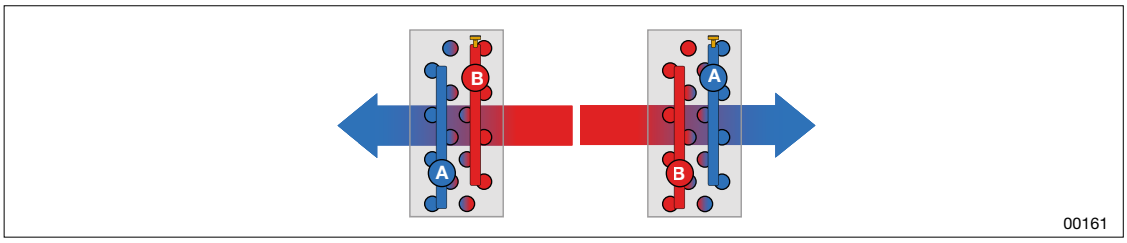

Figure: Connection pipe, cooling coil (ELBC, ECET-VK)

A. Fluid in
B. Fluid out

Drainage for air cooler water must be connected, see "9 CONNECT DRAINAGE, WATER TRAP", page 25.

10.5.1 Valve actuator

Assembly must be carried out according to the accompanying instructions from IV Produkt's supplier. See order-specific documentation onIV Produkt's order portal.

The control valve (shunt valve), which regulates water temperature to heating or cooling systems is operated by a valve actuator attached to a control unit. The valve may be of two- or three-way type depending on the connected heating source.

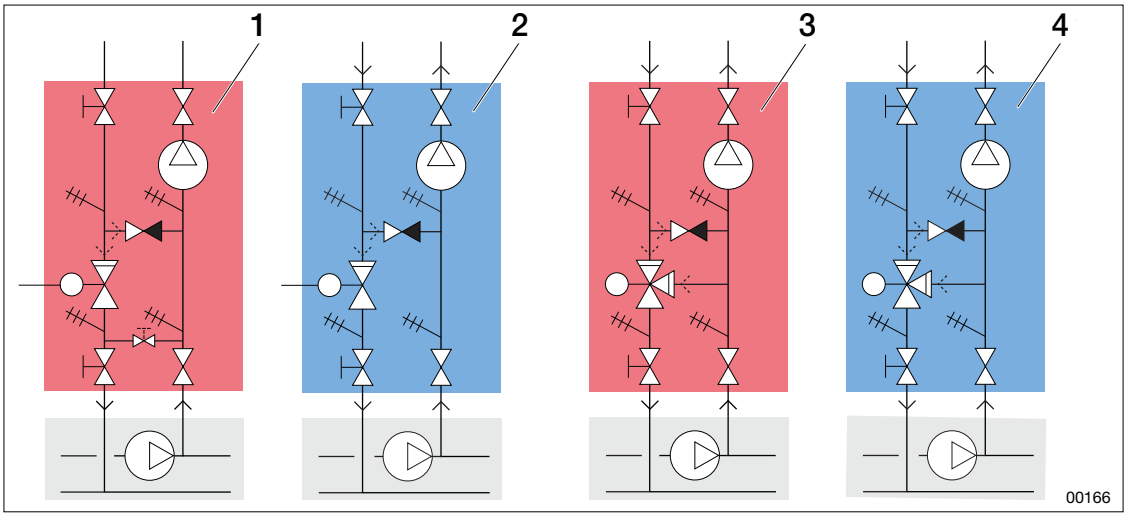

Figure: Example of control valve arrangement in different configurations

1. District heating - two-way valve
2. District cooling - two-way valve
3. Own heating source - three-way valve
4. Own cooling plant - three-way valve

10.5.2 Pump, Pipework package

The pump is only included in the IV Produkt accessory: Pipework package. For information and installation, see separate product sheet on IV Produkt's order portal. Other pumps are provided by the customer, and their installation is the customer's responsibility.

10.6 Air heater electric (ECET-EV) in duct

WARNING!
Risk of life-threatening or serious personal injury.

Electrical voltage can cause electric shock, burns and death. The product must not be energised during assembly.

- Electrical connection and electrical work may only be carried out by a qualified electrician.
- For initial start-up of the unit, see Operation and Maintenance of the unit on IV Produkt's Order portal.

00176

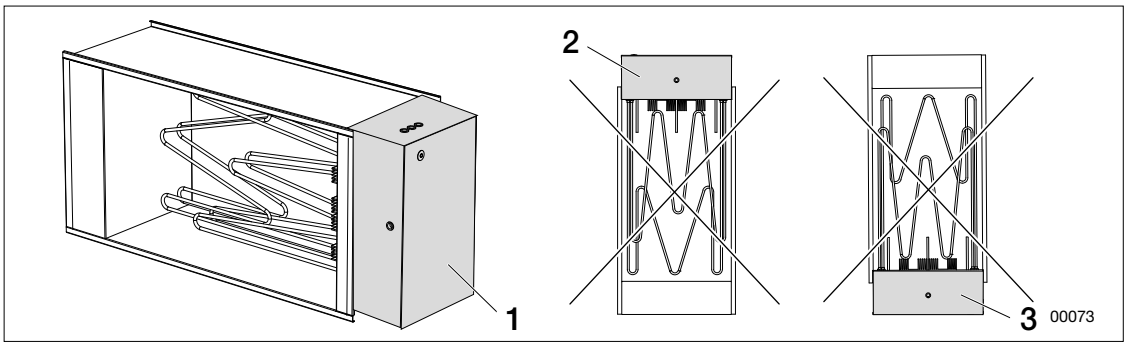

Figure: Air heater electric ECET-EV

1. Cover for connection box
2. Connection box - not to be mounted upwards
3. Connection box - not to be mounted downwards

The distance from the sheet metal casing of the air heater to wood or other combustible material must be 100 mm or more.

The air heater, adapted for assembly in duct systems, requires separate connection. The air flow direction through the air heater must correspond with the direction arrow on the air heater. The heater can be assembled in horizontal or vertical ducts with the connection box to the side.

The distance from the air heater to duct elbows, dampers, filters or the like, should be at least the distance corresponding to the diagonal measurement of the heater (from corner to corner in the heater’s duct section). If the distance is smaller, the air stream through the heater can become uneven and the overheat protection can be tripped.

The air heater is insulated according to the applicable rules for ventilation ducts/ventilation units and with non-combustible insulating material. The type plate and warning plate must be fully visible and it must be possible to open the cover. The air heater must be accessible for replacement and servicing.

11 AFTER ASSEMBLY

11.1 Check

CAUTION!
Risk of damage to the product.
Swarf from drilling left behind after assembly can lead to corrosion and rust on the surface layer of the unit.
- Make sure that the surfaces of the unit are clean of swarf.

00195

CAUTION!
Risk of damage to the product.
Corrosive substances and strong cleaning agents can damage the surface layer.
- Never use strong cleaning agents or corrosive substances when cleaning the unit.

00183

Area	Inspection	Actions if incorrect
Covers	Ensure that inspection hatches do not jam when opening.	1. Adjust the hinges of the hatch. 2. Adjust the support feet. See "6 PREPARE ASSEMBLY", page 15.
Covers	Ensure that all covers are closed before commissioning.	Close open covers.
Unit tilt	Ensure that the unit is correctly tilted for draining.	See "6 PREPARE ASSEMBLY", page 15.
Unit surfaces	Ensure that the unit is clean and free of dirt and debris, such as residual swarf from drilling.	1. Vacuum or brush the surfaces. 2. Wipe with a damp cloth. Detergents such as soap and light alkaline agents can be used for stubborn dirt.
Thermal wheel	Ensure that the thermal wheel is straight and balanced.	See "7.3 Rotor wheel", page 18.
Seals	Visually ensure that all strips and seals are intact. For example, shine a torch from the inside in all joints.	Replace any damaged strips.

You are welcome to contact us

IV Produkt AB, Sjöuddevägen 7, S-350 43 Växjö, Sweden
+46 470 – 75 88 00
www.ivprodukt.se, www.ivprodukt.com
wwwivprodukt.no, www.ivprodukt.dk, www.ivprodukt.de

Support:

Control:	+46 470 75 89 00, styr@ivprodukt.se
Service:	+46 470 75 89 99, service@ivprodukt.se
Spare parts:	+46 470 75 86 00, reservdelar@ivprodukt.se
DU/Documentation:	+46 470 75 88 00, du@ivprodukt.se

Ver 00_en_2024-09-02